DWG. SIZE	DWG. NO.
D	032-7429

REVISIONS

SYM.	E.C.N.	DATE	APVD.

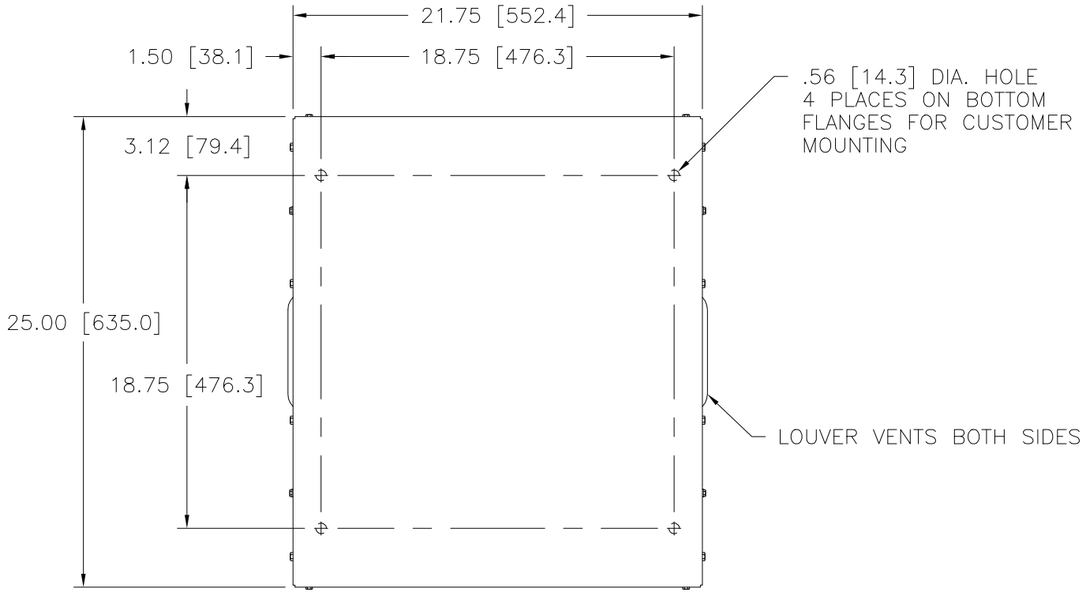

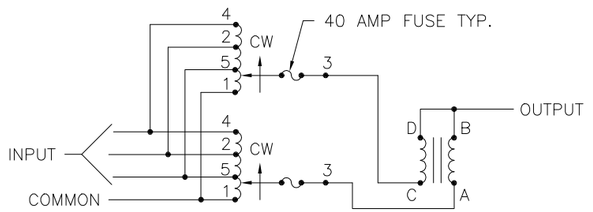

SCHEMATIC

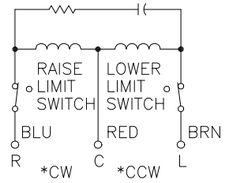

MOTOR CIRCUIT
120V, 50/60 HZ
* ROTATION AS VIEWED
FROM TOP END
MOTOR SPEEDS: 5, 15, 30, 60 SEC.

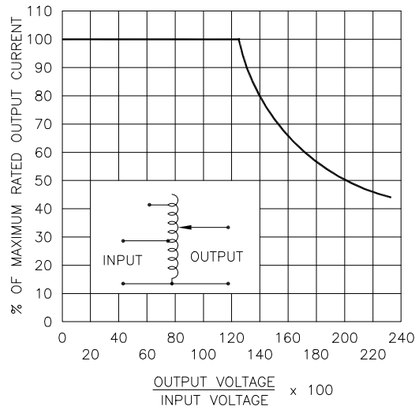

FIGURE A
MAXIMUM OUTPUT CURRENT OF ANY
DUAL INPUT VOLTAGE OR VOLTAGE DOUBLER
UNIT OPERATED AT LOWER INPUT VOLTAGE.

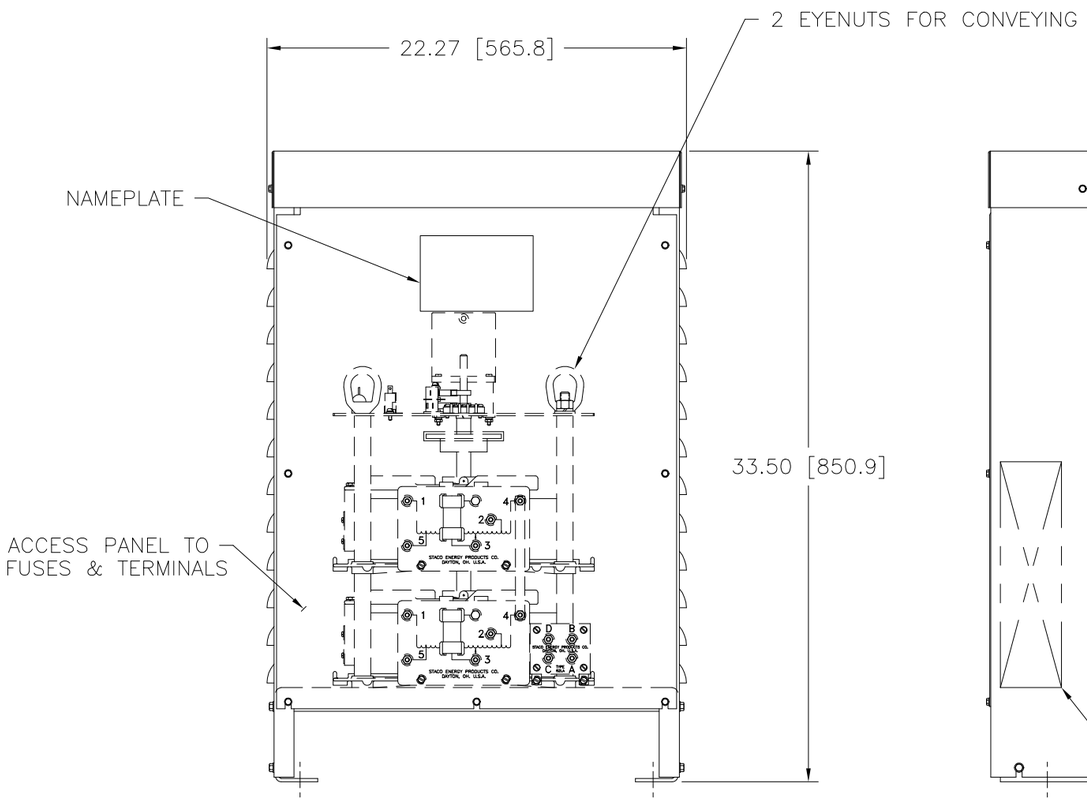

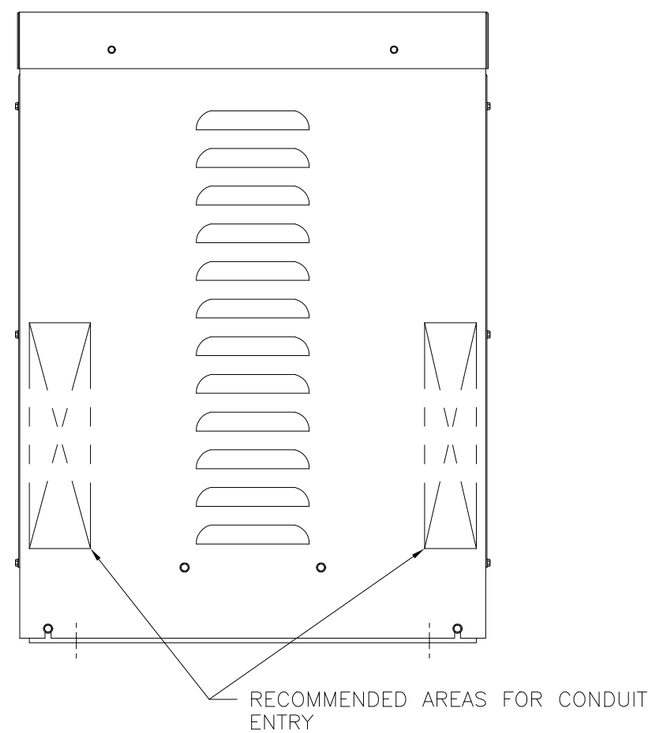

* MAXIMUM OUTPUT CURRENT IN OUTPUT VOLTAGE RANGE FROM 0 TO 25 PERCENT ABOVE LINE VOLTAGE. AT HIGHER OUTPUT VOLTAGES, OUTPUT CURRENT MUST BE REDUCED ACCORDING TO RATING CURVE (SEE FIGURE A).

++ MAXIMUM KVA AT MAXIMUM OUTPUT AND CORRESSPONDING DE-RATED CURRENT. MAXIMUM KVA AT LOWER OUTPUT VOLTAGES MAY BE CALCULATED FROM RATING CURVE, (SEE FIGURE A).

V.D. = VOLTAGE DOUBLER.

SPEED (SECONDS)	MODEL NUMBER
5	5M6020E-2P
15	15M6020E-2P
30	30M6020E-2P
60	60M6020E-2P

SPECIFICATIONS

WIRING	INPUT VOLTS	INPUT HERTZ	OUTPUT VOLTS	OUTPUT CONSTANT CURRENT LOAD MAX. AMPS	OUTPUT CONSTANT CURRENT LOAD MAX. KVA	SHAFT ROTATION FOR VOLTAGE INCREASE	TERMINAL CONNECTIONS FOR INCREASING VOLTAGE AS VIEWED FROM TOP INPUT	TERMINAL CONNECTIONS FOR INCREASING VOLTAGE AS VIEWED FROM TOP OUTPUT
SINGLE PHASE PARALLEL	240	50/60	0-240	70	16.8	CW	1-4	1-B
			0-280	70	19.6	CW	1-2	1-B
	120	50/60	0-280	70*-30 V.D.	8.4 ++	CW	1-5	1-B

UNLESS OTHERWISE SPECIFIED. TOLERANCE IS ±
DECIMALS .XX .010 .12 .XXX .005 HOLES .002 .03 ANGLES 1° DRAFT 1-1/2°
UNITS IN [mm]
MATERIAL :
ALL DIMENSIONS APPLY AFTER PLATING

TITLE: SPECIFICATION CONTROL DRAWING
MOTORIZED VARIABLE TRANSFORMER
5,15,30,& 60M6020E-2P

STACO ENERGY PRODUCTS CO.
DAYTON, OHIO U.S.A.

The information and design disclosed herein was originated by and is the property of STACO ENERGY PRODUCTS CO., which reserves all patent, proprietary, design, manufacturing, reproduction, use and sale rights thereto, and to any article disclosed therein except to the extent rights are expressly granted to others. The foregoing does not apply to vendor proprietary parts.

DRAWN BY	DATE	FIRST USED ON	DO NOT SCALE DWG.	CUSTOMER APPROVAL	DATE
T.A.HUFF	01/09/95	M6020E-2P			
CHECKER	DATE	WEIGHT APPROX.	CODE IDENT. NO. 83008	DWG. SIZE D	DWG. NO. 032-7429
ENGINEER	DATE	SCALE .25=1	SHEET 1 OF 1		